SLT 270
R290

FROZEN STONE

NUOVE TECNOLOGIE DEL FREDDO

Self-contained ice maker - Pebble system
Daily production up to 150 kg

• Position n°

• Application fields

Hotel	●●●●●○○○	Fish market	●●●●○○○○
Restaurant	●●○○○○○○	Supermarket	●●●○○○○○
Fast food	●●●●●●○○	SPA	●●○○○○○○
Bar	●●●●○○○○	Medical	●●○○○○○○
Disco	●●●●●●○○	Industry	●●○○○○○○

• Features & Plus

- Compact and longlasting nuggets
- Low consumption (1 liter water / 1 kg ice) - aircooled vers.
- Electromechanical functionning
- External structure AISI 304 Scotch Brite
- Evaporator AISI 304, auger AISI 303 made
- Air Cooling and Water Cooling systems
- Standard and special voltages
- Insulated retractable door
- ON-OFF switch
- Dust proof water basin
- Easy cleaning thanks to rounded surfaces
- External protective filter, removable, easy to clean
- Internal bin insulation HCFC free
- Conformity to RoHS directive
- Automatic water charge
- Model in Tropical Class + 43 ° C
- Undercounter model

• Available pebble size

Drawing for reference only

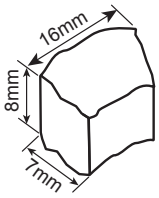

• Prod. 24h

Air temp.	Water temp.	Prod. 24h kg
10° C	7° C	150
21° C	15° C	140
32° C	21° C	115

2 Years Warranty
subject to limitations

• Certifications available for this model

www.icemachines.co.uk

NUOVE TECNOLOGIE DEL FREDDO

ECOMPANY

SLT 270
R290

FROZEN STONE

NUOVE TECNOLOGIE DEL FREDDO

Self-contained ice maker - Pebble system
Daily production up to 150 kg

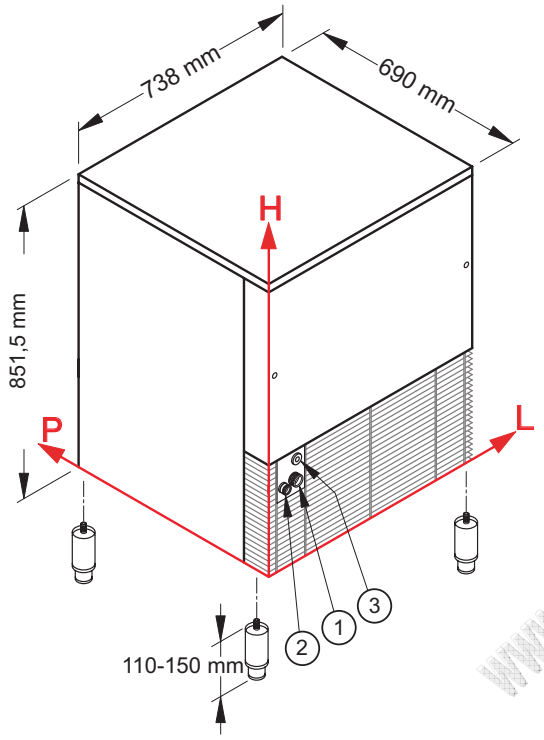

Connections

All measures are referred to the rear bottom-left corner (L-H-Ø)

① Water inlet:
104 mm - 182 mm - 3/4"

② Water outlet:
53 mm - 175 mm - 24 mm

③ Electrical connection:
92 mm - 254 mm

Working conditions

- Location: **Indoor**

	Min	Max
Ambient temperature	+10° C	+43° C
Water temperature	+3° C	+32° C
Voltage	-10%	+10%
Water inlet pressure	1bar (14 psi)	6bar (84 psi)

Technical information

Production in 24h	140 kg
Store capacity, up to	40 kg
Cooling system	A - W
Approximate pebble size	8 x 16 x 7
Refrigerant	R290
Standard voltage	220-240 V ~ 50 Hz
Electrical consumption	720 W
Fuse	10 A
Water consumption	A: 1 l/kg W: 9 l/kg
Sizes (L-P-H mm)	738 - 690 - 851,5
Sizes with pack (L-P-H mm)	780 - 735 - 1015
Net weight	90 kg
Gross weight	100 kg
Finish	AISI 304 stainless steel, scotch brite

All the technical information must be considered at the following conditions:

Sizes without feet | Ambient temperature +21° C | Water temperature +15° C | Electrical consumption at +43° C (standard voltage)

Models and specifications are subject to change without notice
Rev. 01 - Issued September 2019

www.icemachines.co.uk

NUOVE TECNOLOGIE DEL FREDDO

ECOMPANY